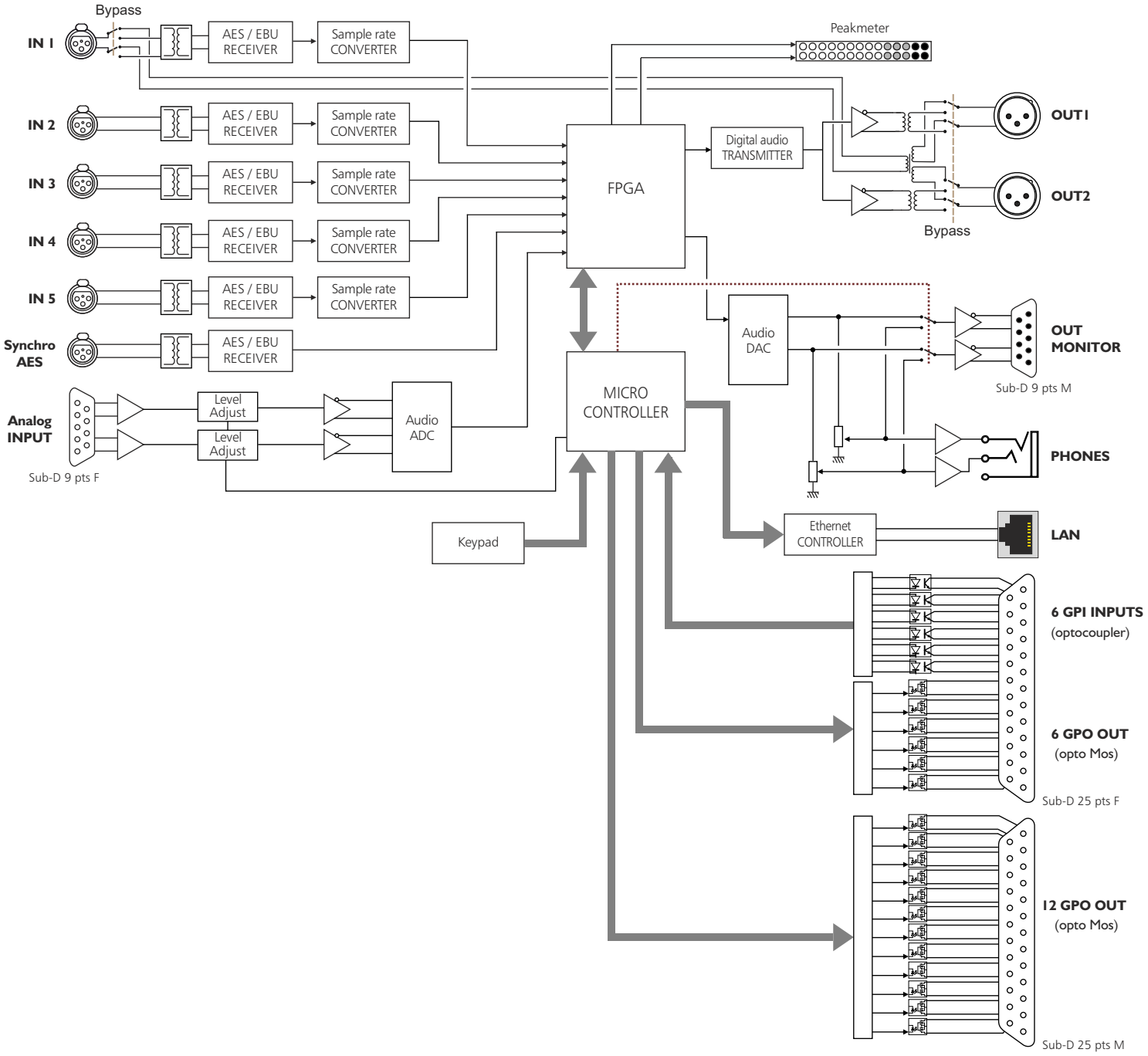
Bypass
IN 1
IN 2
IN 3
IN 4
IN 5
Synchro AES
AES / EBU RECEIVER
Sample rate CONVERTER
Peakmeter
FPGA
Digital audio TRANSMITTER
OUT1
OUT2
Bypass
Audio DAC
OUT MONITOR
Sub-D 9 pts M
MICRO CONTROLLER
Analog INPUT
Sub-D 9 pts F
Level Adjust
Level Adjust
Audio ADC
PHONES
Keypad
Ethernet CONTROLLER
LAN
6 GPI INPUTS
(optocoupler)
6 GPO OUT
(opto Mos)
Sub-D 25 pts F
12 GPO OUT
(opto Mos)
Sub-D 25 pts M