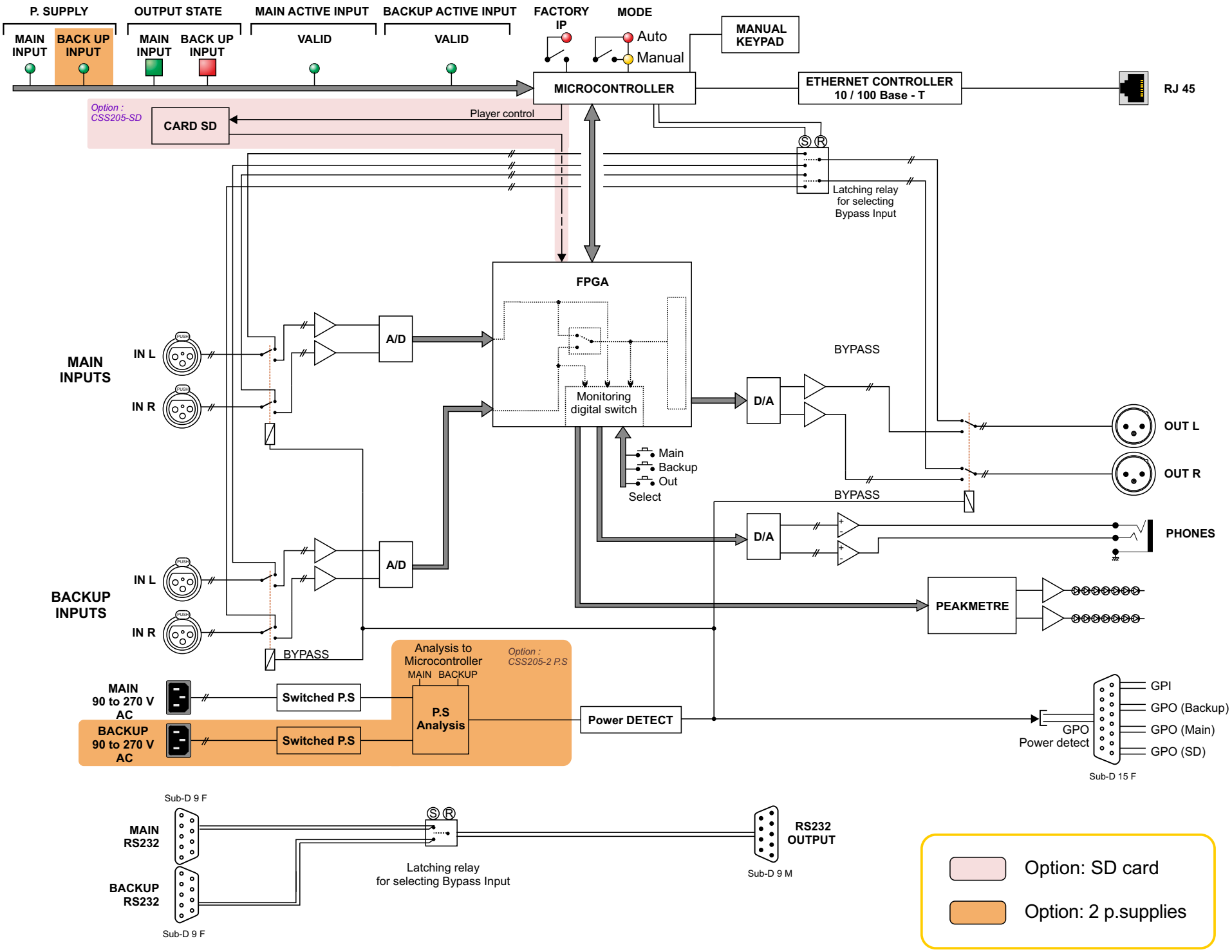
P. SUPPLY
MAIN INPUT
BACK UP INPUT
OUTPUT STATE
MAIN INPUT
BACK UP INPUT
MAIN ACTIVE INPUT
VALID
BACKUP ACTIVE INPUT
VALID
FACTORY IP
MODE
Auto
Manual
MANUAL KEYPAD
MICROCONTROLLER
ETHERNET CONTROLLER 10 / 100 Base - T
RJ 45
Option : CSS205-SD
CARD SD
Player control
Latching relay for selecting Bypass Input
FPGA
Monitoring digital switch
Main
Backup
Out
Select
A/D
A/D
D/A
D/A
BYPASS
BYPASS
BYPASS
MAIN INPUTS
IN L
IN R
BACKUP INPUTS
IN L
IN R
OUT L
OUT R
PHONES
PEAKMETRE
Analysis to Microcontroller
MAIN BACKUP
Option : CSS205-2 P.S
MAIN 90 to 270 V AC
BACKUP 90 to 270 V AC
Switched P.S
Switched P.S
P.S Analysis
Power DETECT
GPO Power detect
GPI
GPO (Backup)
GPO (Main)
GPO (SD)
Sub-D 15 F
Sub-D 9 F
MAIN RS232
BACKUP RS232
Sub-D 9 F
Latching relay for selecting Bypass Input
RS232 OUTPUT
Sub-D 9 M
Option: SD card
Option: 2 p.supplies