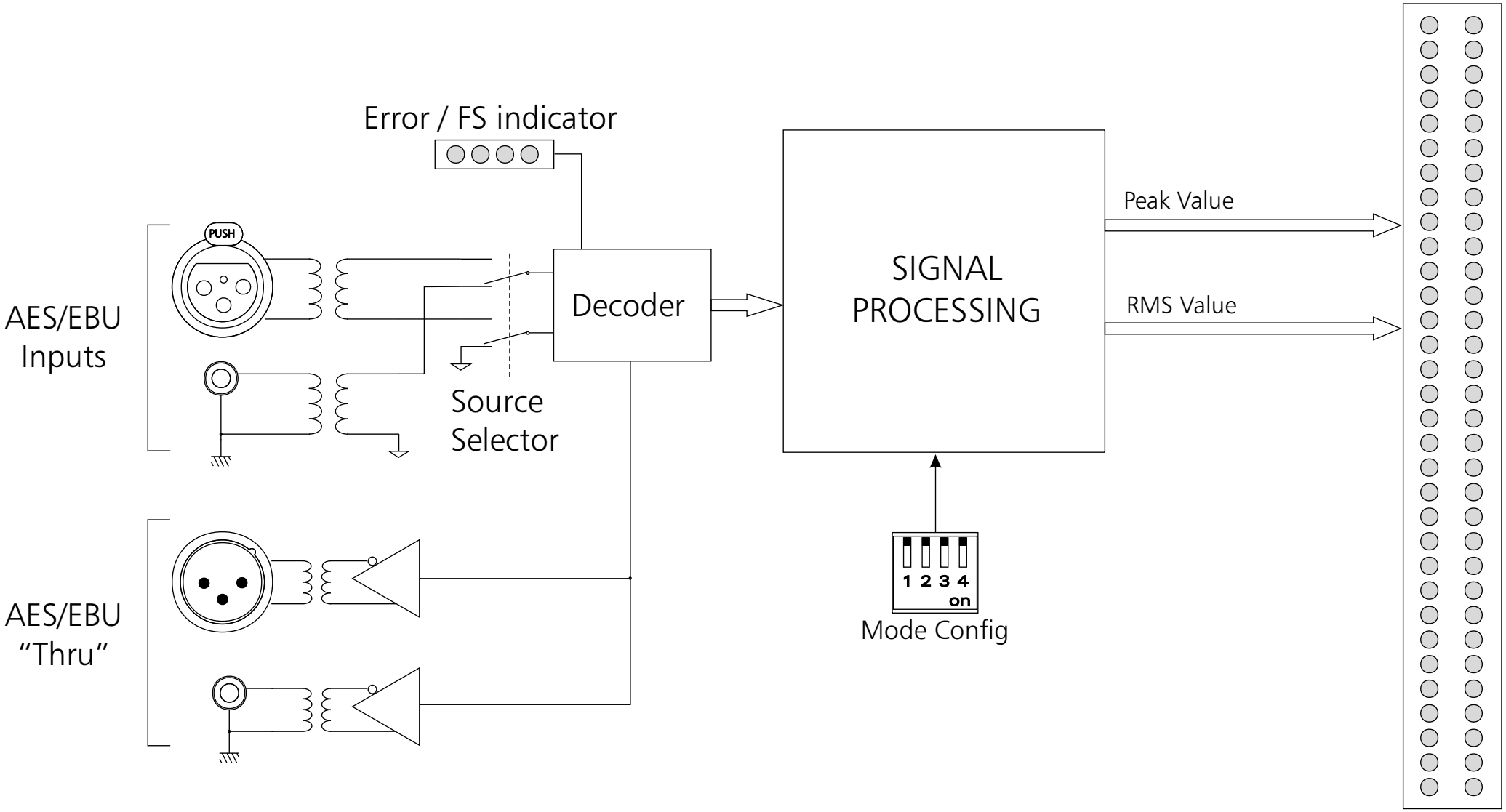
Error / FS indicator
PUSH
AES/EBU
Inputs
Decoder
Source
Selector
SIGNAL
PROCESSING
Peak Value
RMS Value
AES/EBU
"Thru"
1 2 3 4
on
Mode Config