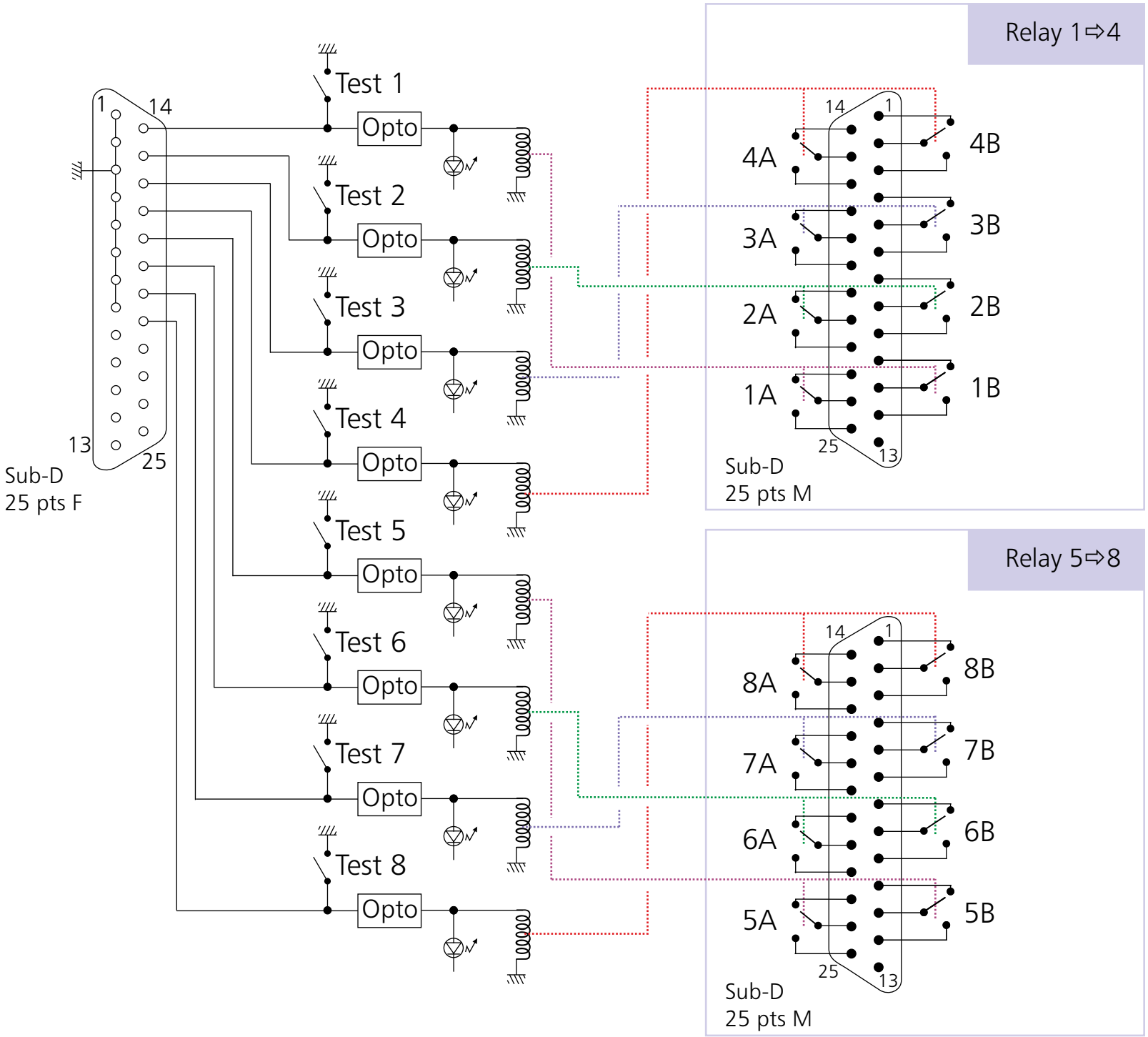
Relay 1⇨4
Relay 5⇨8
Test 1
Test 2
Test 3
Test 4
Test 5
Test 6
Test 7
Test 8
Opto
1
14
13
25
Sub-D
25 pts F
4A
3A
2A
1A
4B
3B
2B
1B
Sub-D
25 pts M
8A
7A
6A
5A
8B
7B
6B
5B
Sub-D
25 pts M