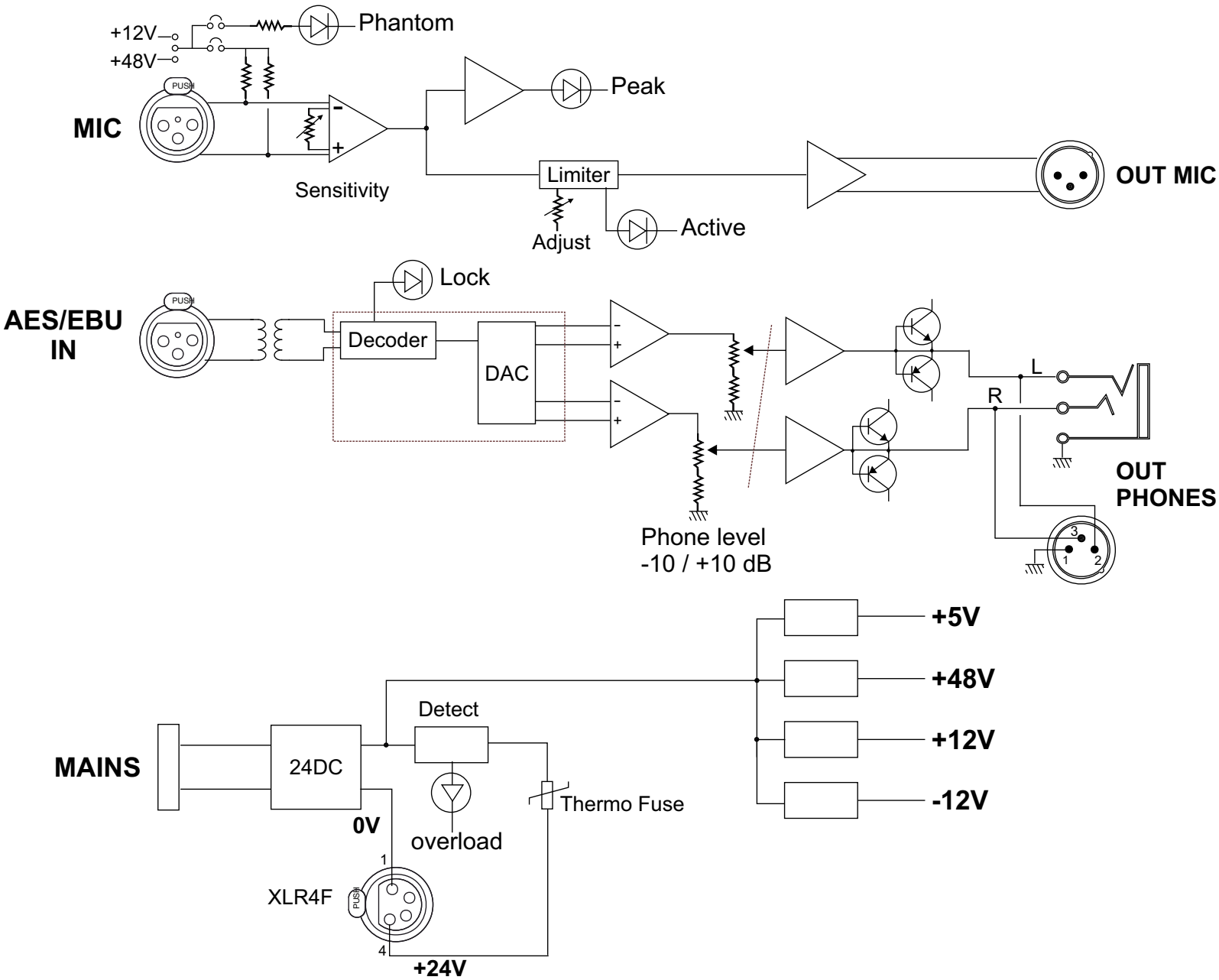
+12V
+48V
Phantom
MIC
PUSH
Peak
Sensitivity
Limiter
Adjust
Active
OUT MIC
AES/EBU
IN
Lock
Decoder
DAC
L
R
OUT
PHONES
Phone level
-10 / +10 dB
+5V
+48V
+12V
-12V
MAINS
24DC
Detect
0V
overload
Thermo Fuse
XLR4F
+24V