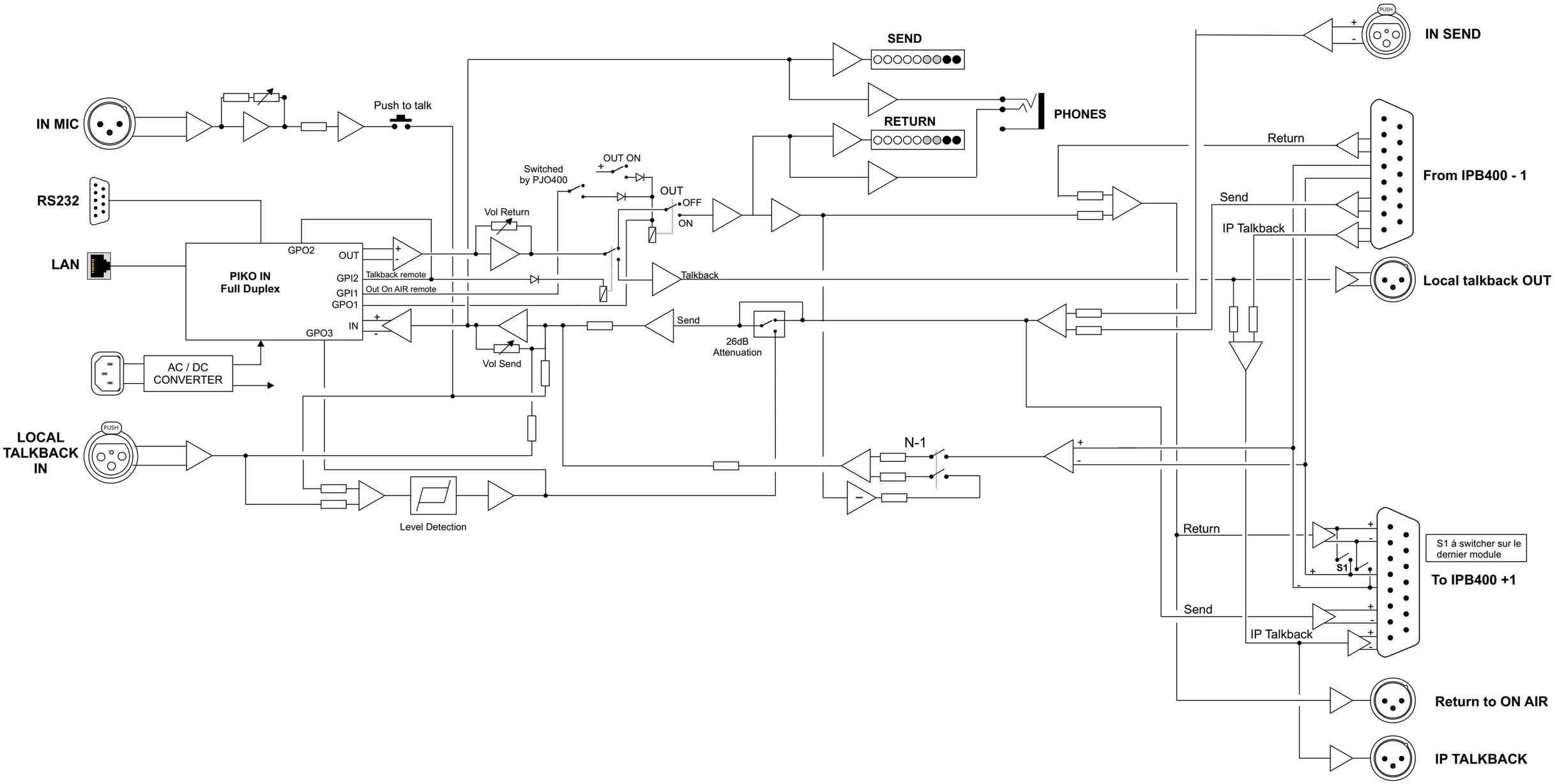
IN MIC
Push to talk
RS232
LAN
PIKO IN
Full Duplex
GPO2
OUT
GPI2
GPI1
GPO1
IN
GPO3
Talkback remote
Out On AIR remote
AC / DC
CONVERTER
LOCAL
TALKBACK
IN
PUSH
Level Detection
Vol Return
Switched
by PJO400
OUT ON
OUT
OFF
ON
Talkback
Vol Send
Send
26dB
Attenuation
SEND
RETURN
PHONES
N-1
IN SEND
Return
Send
IP Talkback
From IPB400 - 1
Local talkback OUT
S1 à switcher sur le
dernier module
S1
To IPB400 +1
Return to ON AIR
IP TALKBACK