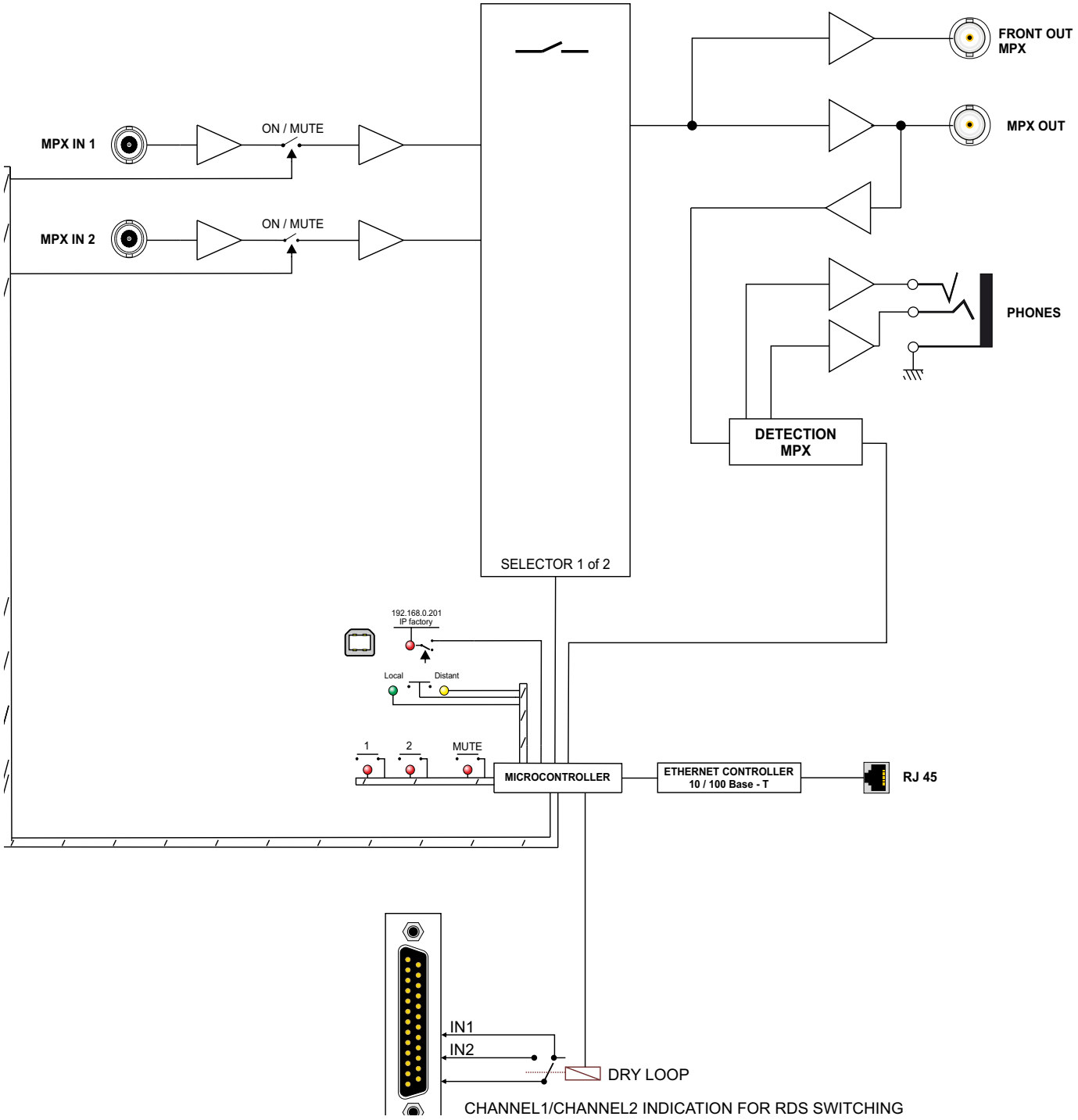
MPX IN 1
ON / MUTE
MPX IN 2
ON / MUTE
FRONT OUT
MPX
MPX OUT
PHONES
DETECTION
MPX
SELECTOR 1 of 2
192.168.0.201
IP factory
Local
Distant
1
2
MUTE
MICROCONTROLLER
ETHERNET CONTROLLER
10 / 100 Base - T
RJ 45
IN1
IN2
DRY LOOP
CHANNEL1/CHANNEL2 INDICATION FOR RDS SWITCHING