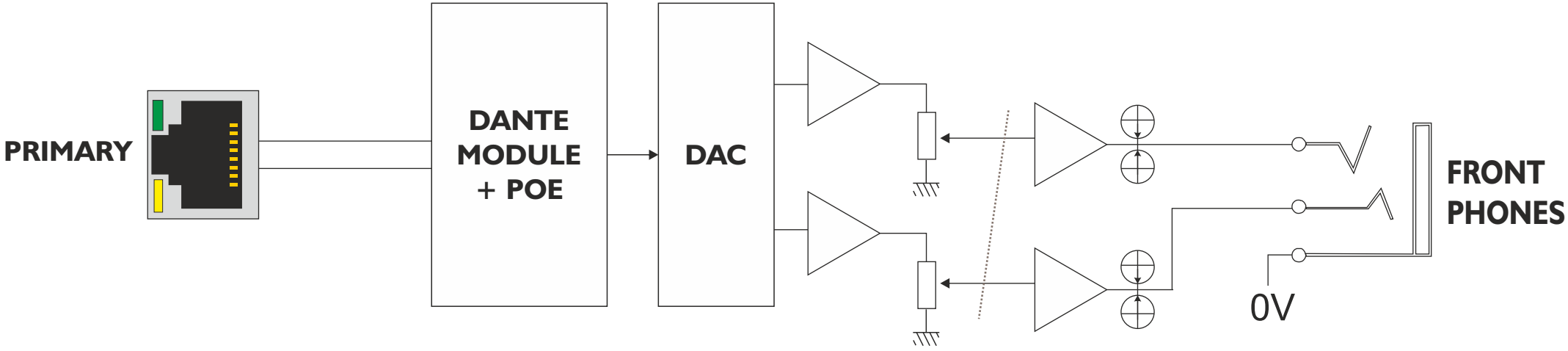
PRIMARY
DANTE
MODULE
+ POE
DAC
FRONT
PHONES
0V

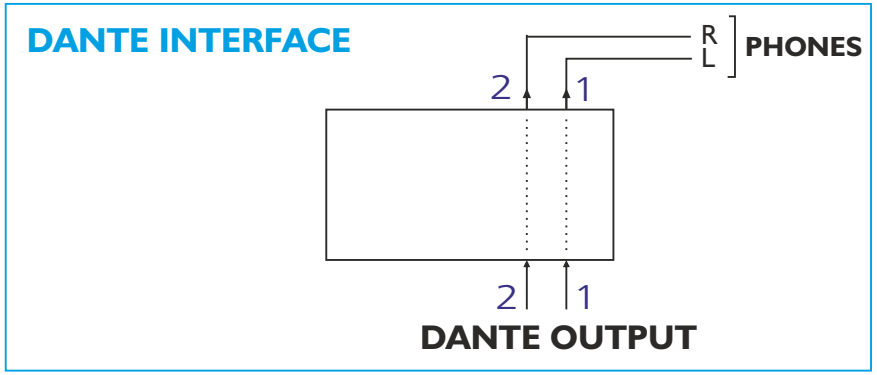
DANTE INTERFACE
R
L
PHONES
2
1
2
1
DANTE OUTPUT