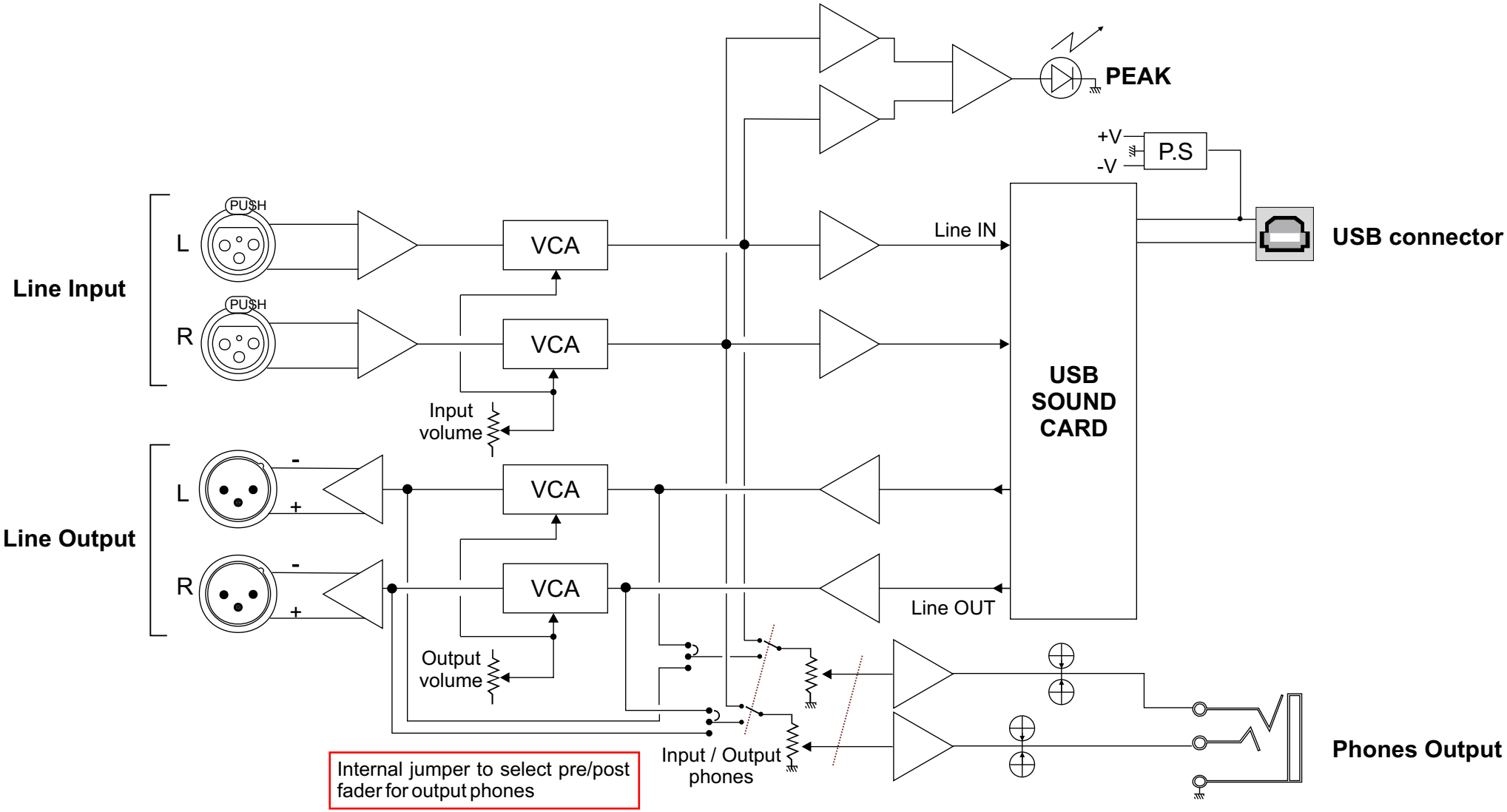
PEAK
+V
-V
P.S
USB connector
Line Input
L
R
PUSH
PUSH
VCA
VCA
Line IN
USB
SOUND
CARD
Input
volume
Line Output
L
R
-
+
-
+
VCA
VCA
Line OUT
Output
volume
Input / Output
phones
Phones Output
Internal jumper to select pre/post
fader for output phones