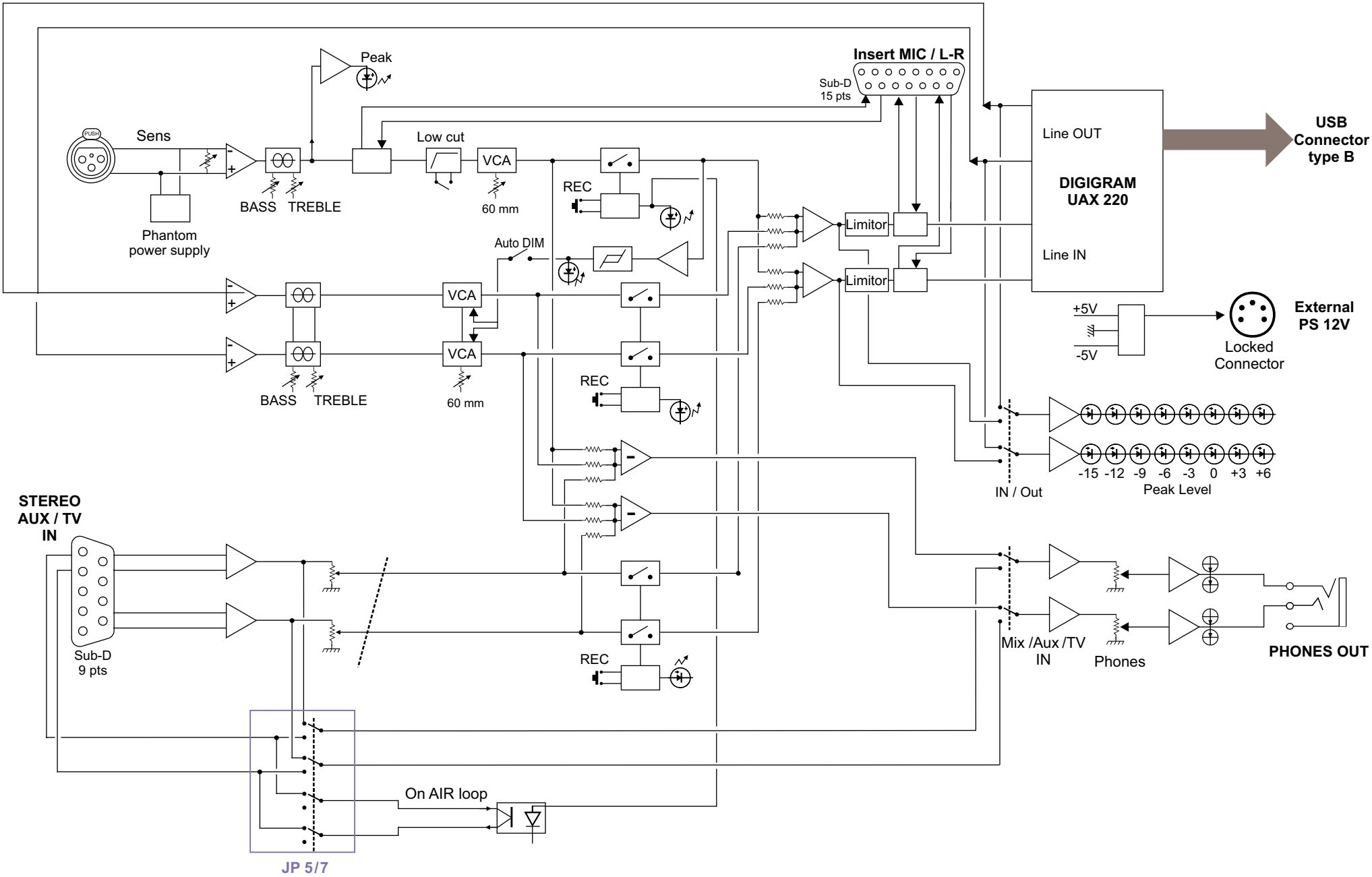
Peak
Insert MIC / L-R
Sub-D
15 pts
Sens
Low cut
VCA
REC
BASS
TREBLE
60 mm
Phantom
power supply
Auto DIM
Limitor
Line OUT
DIGIGRAM
UAX 220
Line IN
USB
Connector
type B
+5V
-5V
External
PS 12V
Locked
Connector
-15 -12 -9 -6 -3 0 +3 +6
Peak Level
IN / Out
STEREO
AUX / TV
IN
Sub-D
9 pts
Mix /Aux /TV
IN
Phones
PHONES OUT
On AIR loop
JP 5/7