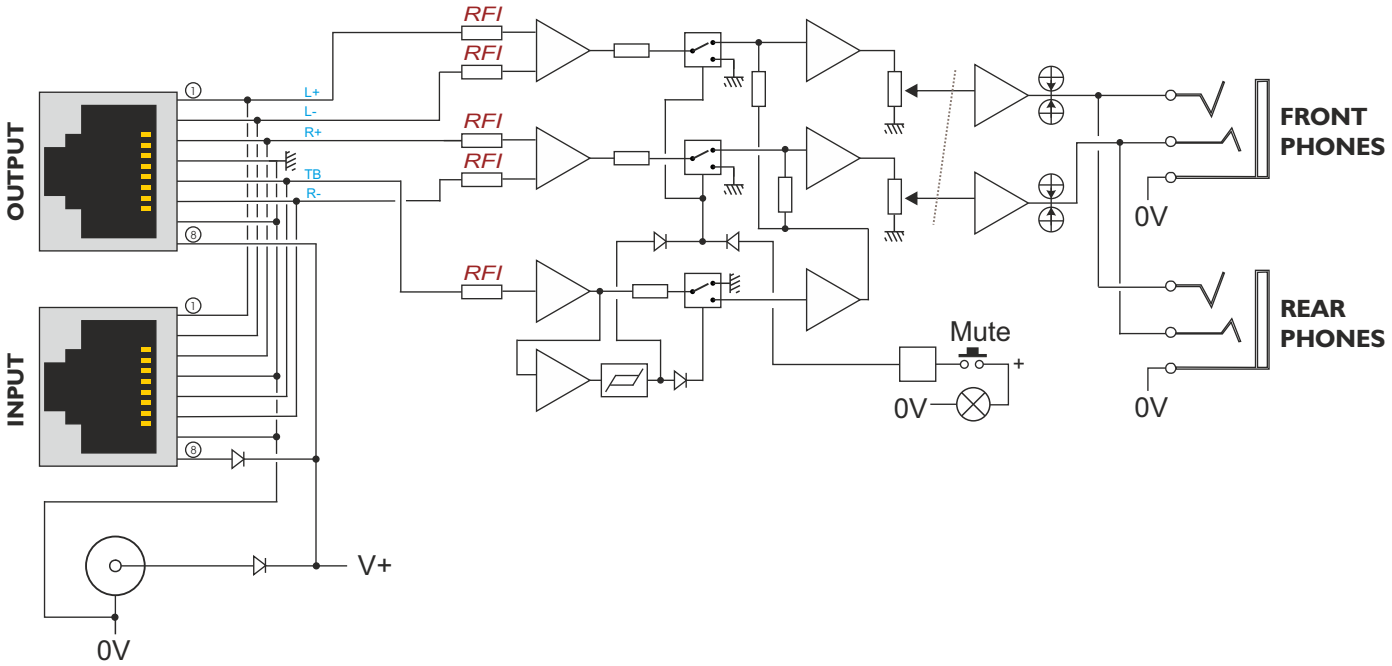
OUTPUT
INPUT
L+
L-
R+
TB
R-
RFI
RFI
RFI
RFI
RFI
Mute
+
0V
0V
0V
0V
V+
FRONT
PHONES
REAR
PHONES