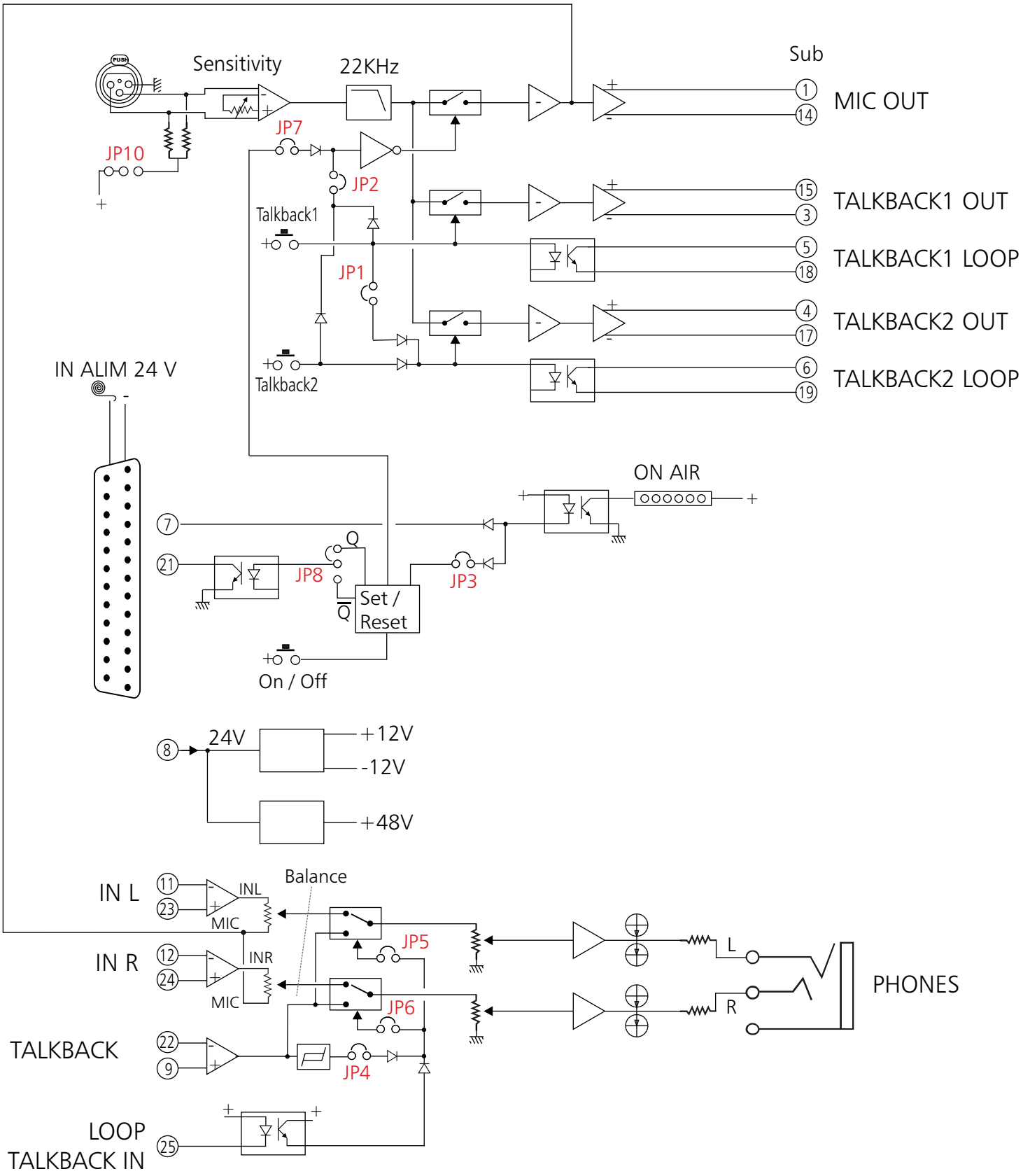
Sensitivity
22KHz
Sub
MIC OUT
JP7
JP10
JP2
Talkback1
TALKBACK1 OUT
TALKBACK1 LOOP
JP1
TALKBACK2 OUT
TALKBACK2 LOOP
Talkback2
IN ALIM 24 V
ON AIR
Q
JP8
JP3
Set / Reset
On / Off
24V
+12V
-12V
+48V
IN L
INL
Balance
MIC
JP5
L
IN R
INR
JP6
R
PHONES
TALKBACK
JP4
LOOP
TALKBACK IN