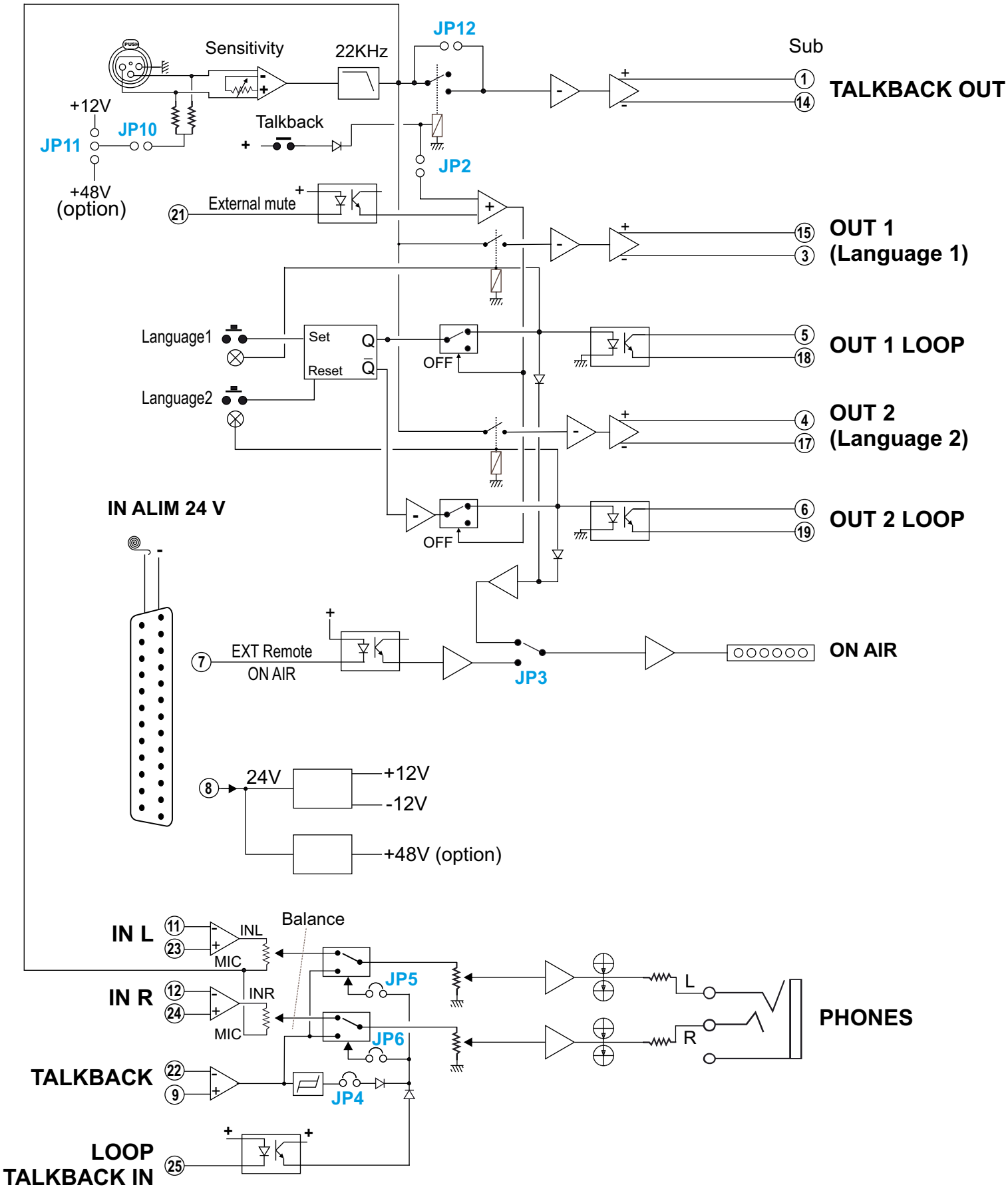
JP12
Sub
Sensitivity
22KHz
TALKBACK OUT
+12V
JP10
JP11
Talkback
JP2
+48V
(option)
External mute
OUT 1
(Language 1)
Language1
Set
Q
Reset
Q̄
OFF
OUT 1 LOOP
Language2
OUT 2
(Language 2)
IN ALIM 24 V
OFF
OUT 2 LOOP
EXT Remote
ON AIR
JP3
ON AIR
24V
+12V
-12V
+48V (option)
IN L
INL
Balance
MIC
JP5
IN R
INR
MIC
JP6
L
R
PHONES
TALKBACK
JP4
LOOP
TALKBACK IN