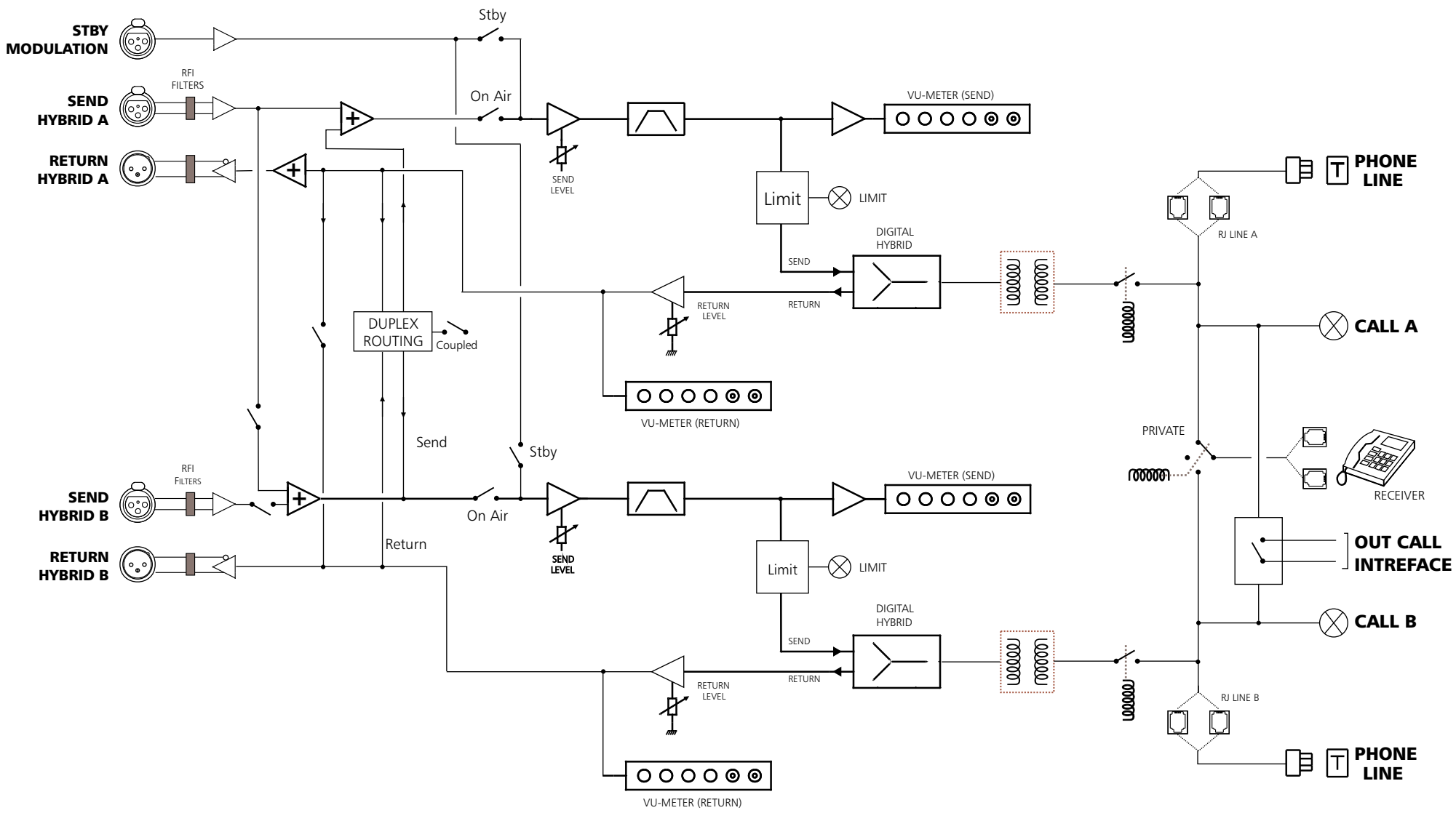
STBY
MODULATION
SEND
HYBRID A
RETURN
HYBRID A
RFI
FILTERS
Stby
On Air
SEND
LEVEL
VU-METER (SEND)
Limit
LIMIT
DIGITAL
HYBRID
SEND
RETURN
RETURN
LEVEL
DUPLEX
ROUTING
Coupled
VU-METER (RETURN)
PHONE
LINE
RJ LINE A
CALL A
PRIVATE
RECEIVER
OUT CALL
INTREFACE
CALL B
RJ LINE B
PHONE
LINE
Send
Return
SEND
HYBRID B
RETURN
HYBRID B
RFI
FILTERS
Stby
On Air
SEND
LEVEL
VU-METER (SEND)
Limit
LIMIT
DIGITAL
HYBRID
SEND
RETURN
RETURN
LEVEL
VU-METER (RETURN)