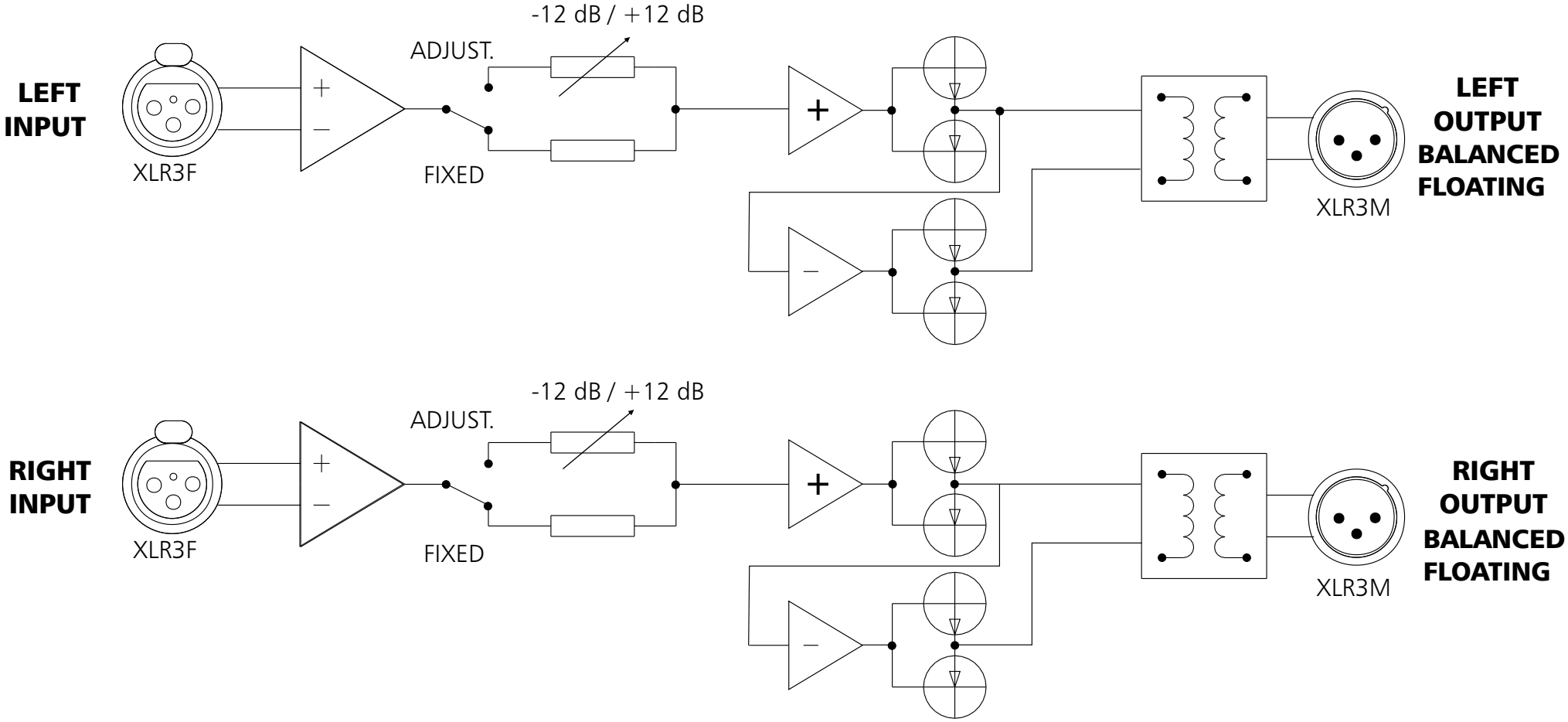
LEFT INPUT
XLR3F
+
−
ADJUST.
-12 dB / +12 dB
FIXED
+
−
XLR3M
LEFT OUTPUT BALANCED FLOATING
RIGHT INPUT
XLR3F
+
−
ADJUST.
-12 dB / +12 dB
FIXED
+
−
XLR3M
RIGHT OUTPUT BALANCED FLOATING