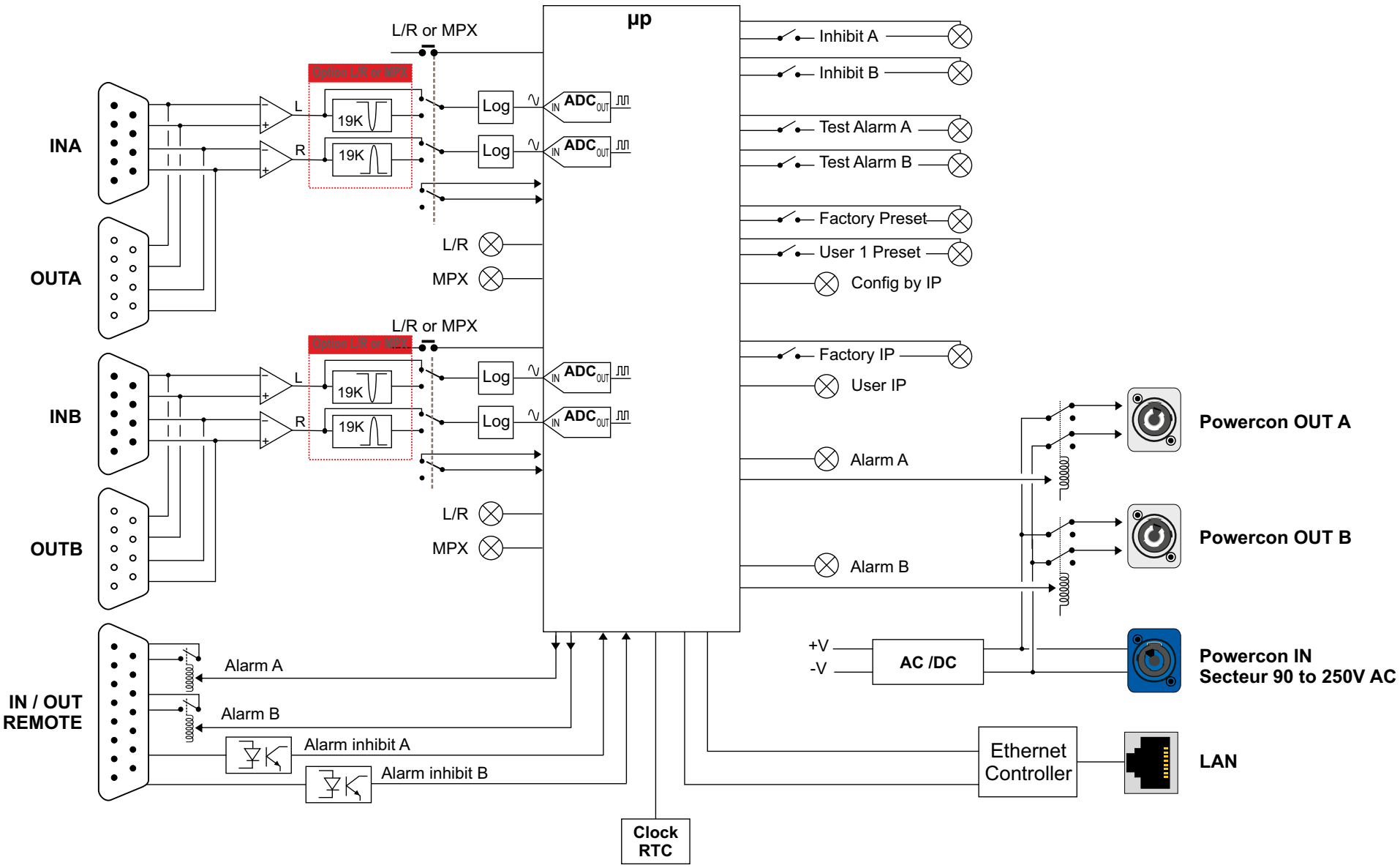
µp
INA
OUTA
INB
OUTB
IN / OUT
REMOTE
L/R or MPX
Option L/R or MPX
L
R
19K
Log
ADC
IN
OUT
L/R
MPX
Inhibit A
Inhibit B
Test Alarm A
Test Alarm B
Factory Preset
User 1 Preset
Config by IP
Factory IP
User IP
Alarm A
Alarm B
Alarm inhibit A
Alarm inhibit B
+V
-V
AC /DC
Powercon OUT A
Powercon OUT B
Powercon IN
Secteur 90 to 250V AC
Ethernet
Controller
LAN
Clock
RTC